1853793
Flores Sideboard

Parts List

A.	Top Assembly	1 pc
B.	Legs	4 pcs
C.	Shelf Panel	1 pc
D.	Feet	4 pcs

* Please make sure that you have all the parts indicated before you begin assembly of this item.
* This item should be assembled on a soft surface to prevent scratching the finish during assembly.
* This item may require periodic tightening.

Attach the Legs, Shelf Panel and Feet
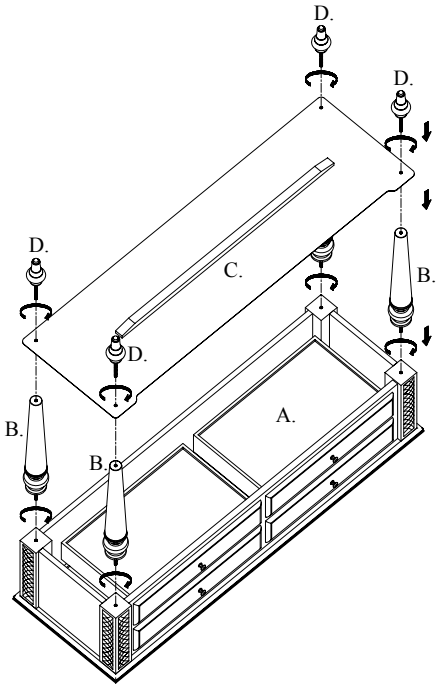
1. **Attach Legs (B)** Lay the Top Assembly (A) upside down. Insert the exposed threads of the Legs (B) into pre-threaded holes in the corner blocks of the Top Assembly (A). Turn in a clockwise direction. Do not fully tighten at this stage.
2. **Attach Shelf Panel (C)** Turn the Shelf Panel (C) upside down. Align the pre-drilled holes in the Shelf Panel (C) with the pre-threaded holes in the Legs (B). See illustration.
3. **Attach Feet (D)** Insert the exposed threads of the Feet (D) through the holes in the Shelf Panels (C) and into the pre-threaded holes in the Legs (B). Tighten by turning in a clockwise direction. Fully tighten Legs (B) at this time.